DIFFERENTIAL AND DRIVELINE

CONTENTS

	page
GENERAL INFORMATION	
FRONT DRIVESHAFT IDENTIFICATION	1
FRONT DRIVESHAFTS	1
DESCRIPTION AND OPERATION	
DRIVESHAFT SERVICE	2
DIAGNOSIS AND TESTING	
DRIVESHAFT DIAGNOSIS	2
REMOVAL AND INSTALLATION	
FRONT DRIVESHAFTS	3
DISASSEMBLY AND ASSEMBLY	
DRIVESHAFT RECONDITIONING PROCEDURE	8
INNER TRIPOD JOINT SEAL BOOT	9
OUTER C/V JOINT BEARING SHIELD SERVICE	13
OUTER C/V JOINT SEALING BOOT SERVICE	12
SPECIFICATIONS	
TORQUE SPECIFICATIONS	14
SPECIAL TOOLS	
DRIVESHAFT–SPECIAL TOOLS	14

GENERAL INFORMATION

FRONT DRIVESHAFTS

Vehicles equipped with either an automatic or manual transmission uses an unequal length driveshaft system.

Vehicles equipped with automatic transaxles use a solid short interconnecting shaft on the left side. The right side of the vehicle uses a longer solid interconnecting shaft.

Driveshafts used on both the right and left sides of the vehicle use a tuned rubber damper weight. The damper weight on the right side is a single clamp style damper. The damper weight on the left side is a double clamp style damper. When replacing a driveshaft, be sure the replacement driveshaft has the same damper weight as the original.

Both driveshaft assemblies use the same type of inner and outer joints. The inner joint of both driveshaft assemblies is a tripod joint, and the outer joint of both driveshaft assemblies is a Rzeppa joint. Both tripod joints and Rzeppa joints are true constant velocity (C/V) joint assemblies. The inner tripod joint allows for the changes in driveshaft length through the jounce and rebound travel of the front suspension.

On vehicles equipped with ABS brakes, the outer C/V joint is equipped with a tone wheel used to determine vehicle speed for ABS brake operation.

The inner tripod joint of both driveshafts is splined into the transaxle side gears. The inner tripod joints are retained in the side gears of the transaxle using a snap ring located in the stub shaft of the tripod joint. The outer C/V joint has a stub shaft that is splined into the wheel hub and retained by a hub nut using a nut lock and cotter pin, hub nut retention system.

NOTE: This vehicle does not use a rubber lip bearing seal as on past front wheel drive cars, to prevent contamination of the front wheel bearing. On these vehicles, the face of the outer C/V joint has a metal bearing shield which is pressed onto the end of the outer C/V joint housing. This design deters direct water splash on bearing seal while allowing any water that gets in, to run out the bottom of the bearing shield. It is important though to thoroughly clean the outer C/V joint and the wheel bearing area in the steering knuckle before it is assembled after servicing.

FRONT DRIVESHAFT IDENTIFICATION

Driveshafts and driveshaft inner and outer boots can be identified as shown in (Fig. 1). Driveshaft boot location on the driveshaft assemblies, is determined by the number of convolutes used on the driveshaft boot. Refer to (Fig. 1) for the correct location of the sealing boots.

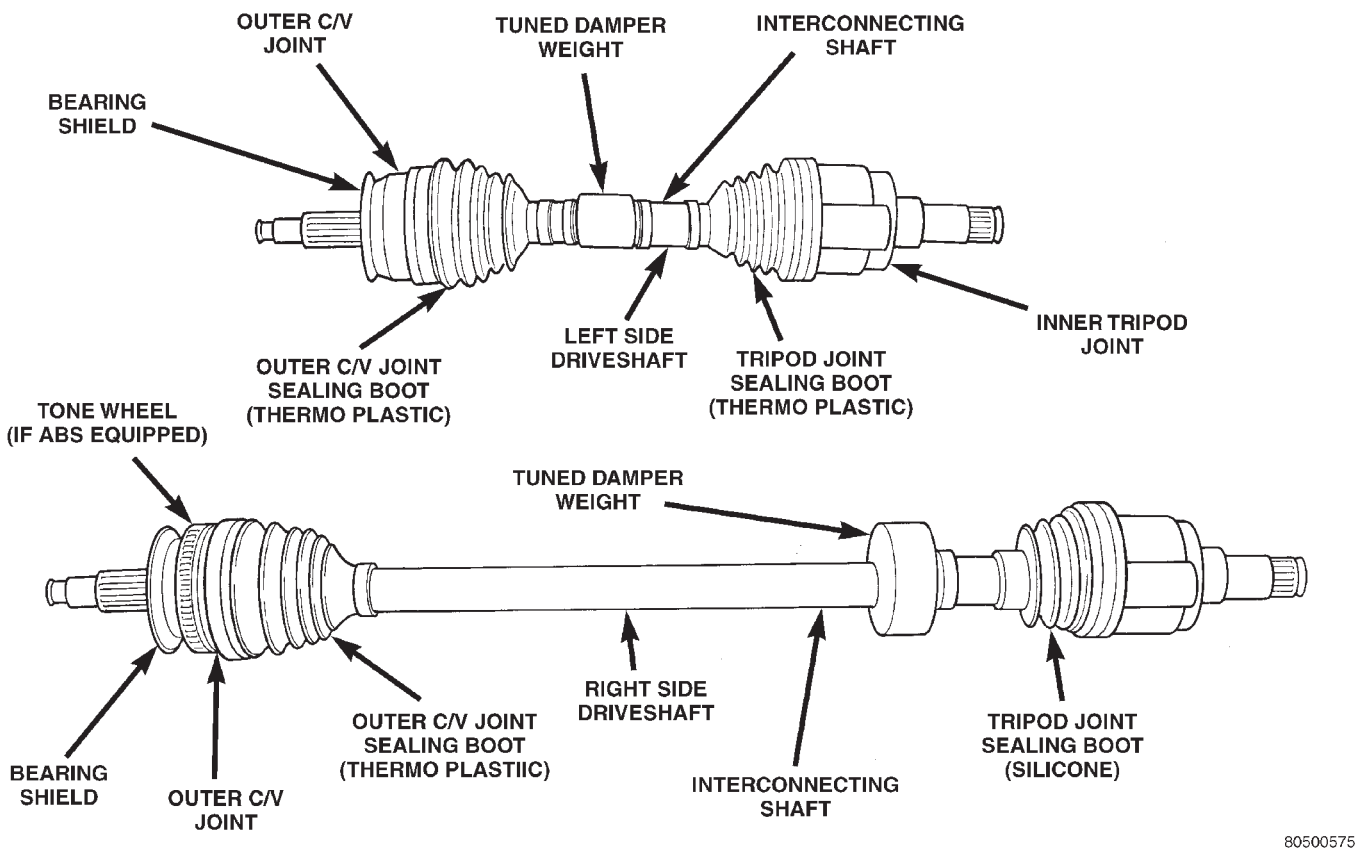

Fig. 1 Driveshaft Identification

DESCRIPTION AND OPERATION

DRIVESHAFT SERVICE

CAUTION: The outer C/V joint used on this vehicle uses a new design for retaining the cross to the interconnecting shaft. These driveshafts incorporate a slight twist (helical) in the spline on the interconnecting shaft where the cross is installed. This twist causes a interference fit between the interconnecting shaft and the cross when the outer C/V joint is installed on the interconnecting shaft. This design eliminates the clearance between the cross and the interconnecting shaft resulting in quieter operation of the driveshaft assembly. This design though, eliminated the capability of removing the outer C/V joint from the interconnecting shaft. For this reason the driveshafts will be serviced as a quarter shaft (outer C/V joint/sealing boot, interconnecting shaft and vibration damper) in the event of a outer C/V joint boot failure. The inner joint sealing boot will be serviced, as on past applications, as a separate component of the driveshaft assembly.

CAUTION: Boot sealing is vital to retain special lubricants and to prevent foreign contaminants from entering the C/V joint. Mishandling, such as allowing the assemblies to dangle unsupported, or pulling or pushing the ends, can cut boots or damage C/V joints. During removal and installation procedures, always support both ends of the driveshaft to prevent damage.

DIAGNOSIS AND TESTING

DRIVESHAFT DIAGNOSIS

VEHICLE INSPECTION

(1) Check for grease in the vicinity of the inboard tripod joint and outboard C/V joint; this is a sign of inner or outer joint seal boot or seal boot clamp damage.

(2) A light film of grease may appear on the right inner tripod joint seal boot; this is considered normal and should not require replacement of the seal boot.

NOISE AND/OR VIBRATION IN TURNS

A clicking noise and/or a vibration in turns could be caused by one of the following conditions:

DIAGNOSIS AND TESTING (Continued)

(1) Damaged outer C/V or inner tripod joint seal boot or seal boot clamps. This will result in the loss and/or contamination of the joint grease, resulting in inadequate lubrication of the joint.

(2) Noise may also be caused by another component of the vehicle coming in contact with the driveshafts.

CLUNKING NOISE DURING ACCELERATION

This noise may be a result of one of the following conditions:

(1) A torn seal boot on the inner or outer joint of the driveshaft assembly.

(2) A loose or missing clamp on the inner or outer joint of the driveshaft assembly.

(3) A damaged or worn driveshaft C/V joint.

SHUDDER OR VIBRATION DURING ACCELERATION

This problem could be a result of:

(1) A worn or damaged driveshaft inner tripod joint.

(2) A sticking tripod joint spider assembly (inner tripod joint only).

(3) Improper wheel alignment. See Wheel Alignment in this group for alignment checking and setting procedures and specifications.

VIBRATION AT HIGHWAY SPEEDS

This problem could be a result of:

(1) Foreign material (mud, etc.) packed on the backside of the wheel(s).

(2) Out of balance front tires or wheels. See Group 22, Wheels And Tires for the required balancing procedure.

(3) Improper tire and/or wheel runout. See Group 22, Wheels And Tires for the required runout checking procedure.

REMOVAL AND INSTALLATION

FRONT DRIVESHAFTS

REMOVAL

CAUTION: The driveshaft, when installed, acts as a bolt and secures the front hub/bearing assembly. If vehicle is to be supported or moved on its wheels with a driveshaft removed, install a PROPER–SIZED BOLT AND NUT through front hub. Tighten bolt and nut to 244 N·m (180 ft. lbs.). This will ensure that the hub bearing cannot loosen.

(1) Remove cotter pin, nut lock, and spring washer from the end of the outer C/V joint stub axle (Fig. 2).

(2) Loosen (but do not remove) stub axle to hub/bearing retaining nut. Loosen hub nut while vehicle is on the floor with the brakes applied (Fig. 3). The front hub and driveshaft are splined together and retained by the hub nut.

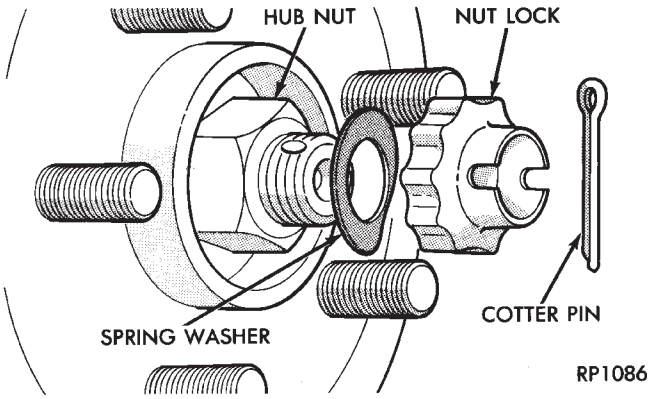

Fig. 2 Cotter Pin, Nut Lock and Spring Washer

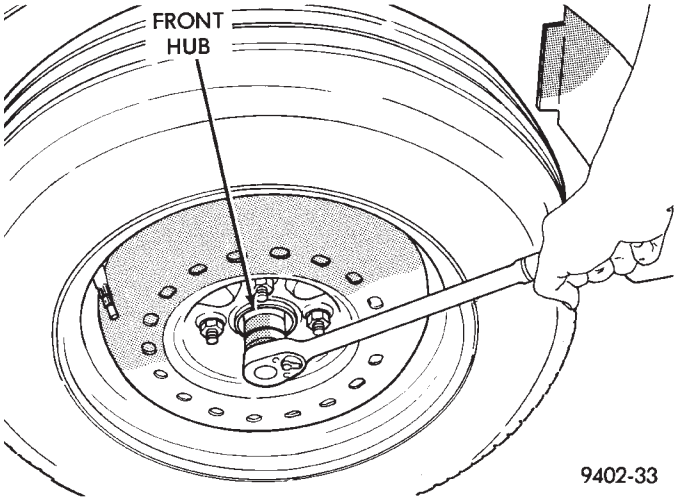

Fig. 3 Loosening Front Hub Retaining Nut

(3) Raise vehicle on jack stands or centered on a frame contact type hoist. See Hoisting, in the Lubrication and Maintenance section, for required lifting procedure to be used for this vehicle.

(4) Remove front tire and wheel assembly from the hub.

(5) Remove front disc brake caliper assembly to steering knuckle guide pin attaching bolts (Fig. 4).

(6) Remove disc brake caliper assembly from steering knuckle. Caliper is removed by first lifting bottom of caliper away from steering knuckle, and then removing top of caliper out from under steering knuckle (Fig. 5).

(7) Support brake caliper/adapter assembly using a wire hook (Fig. 6). **Do not support assembly by the brake flex hose.**

(8) Remove braking disc from front hub.

(9) Remove nut attaching outer tie rod end to steering knuckle. **Remove nut from tie rod end by holding tie rod end stud with a 11/32 socket and loosen and remove nut (Fig. 7).**

REMOVAL AND INSTALLATION (Continued)

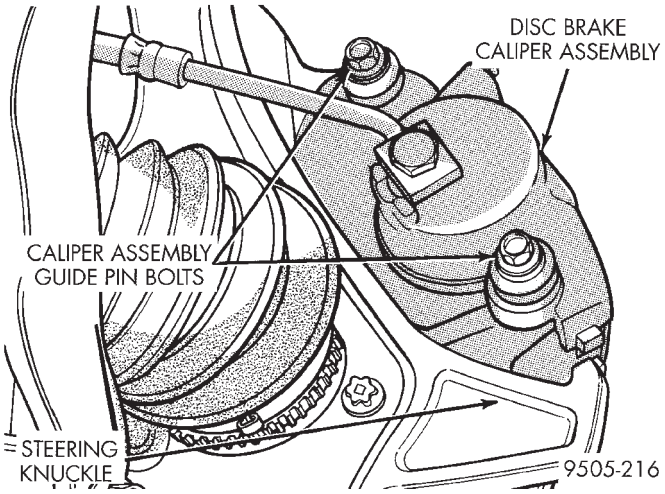

Fig. 4 Caliper Guide Pin Attaching Bolts

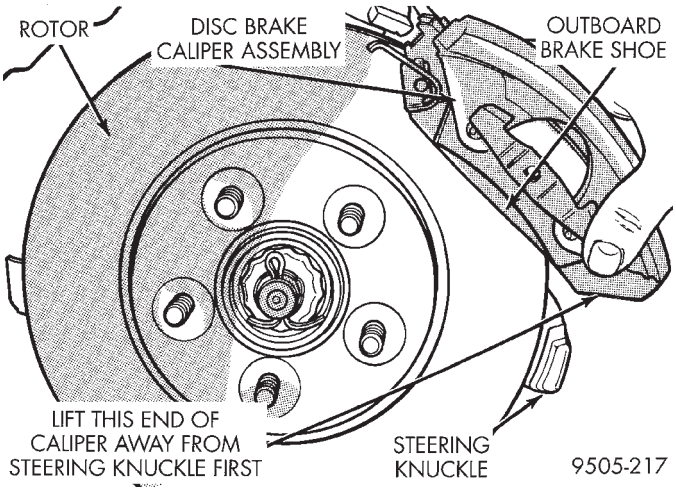

Fig. 5 Removing Disc Brake Caliper

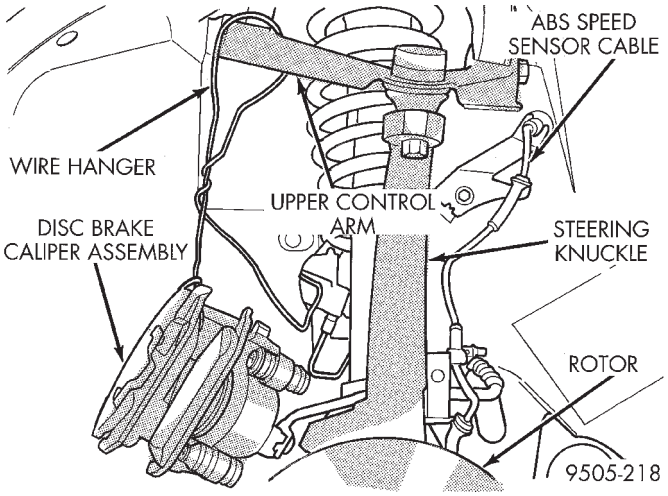

Fig. 6 Correctly Supported Brake Caliper

(10) Remove the tie rod end stud from steering knuckle arm, using remover, Special Tool MB-991113 (Fig. 8).

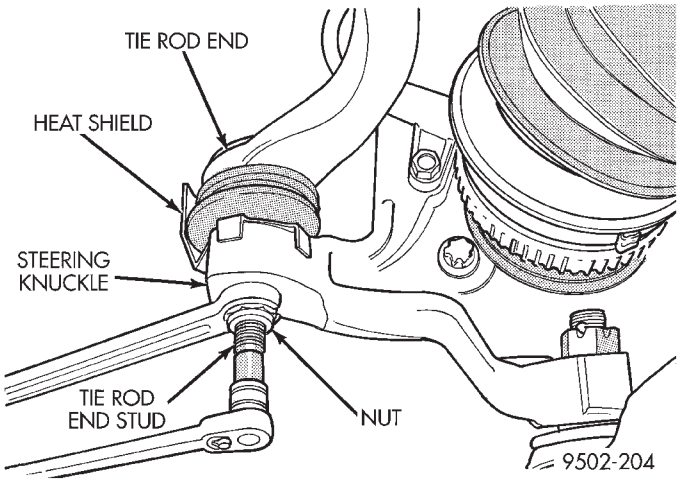

Fig. 7 Removing Tie Rod End Attaching Nut

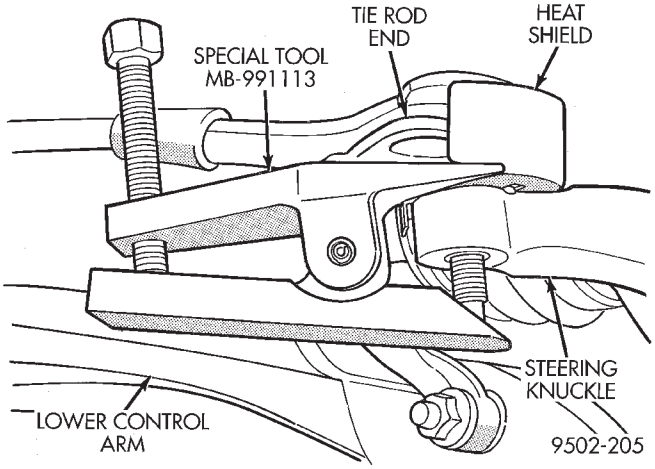

Fig. 8 Tie Rod End Removal from Steering Knuckle

(11) If equipped with antilock brakes, remove the speed sensor cable routing bracket from the steering knuckle (Fig. 9).

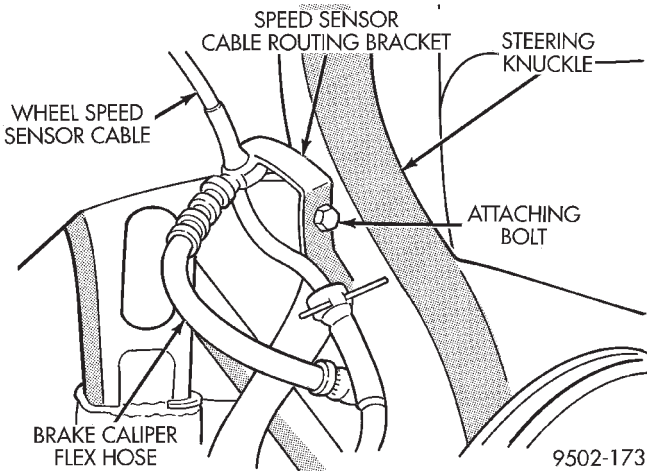

Fig. 9 Wheel Speed Sensor Cable Routing Bracket

REMOVAL AND INSTALLATION (Continued)

(12) Remove cotter pin and castle nut (Fig. 10) from stud of lower ball joint at the steering knuckle.

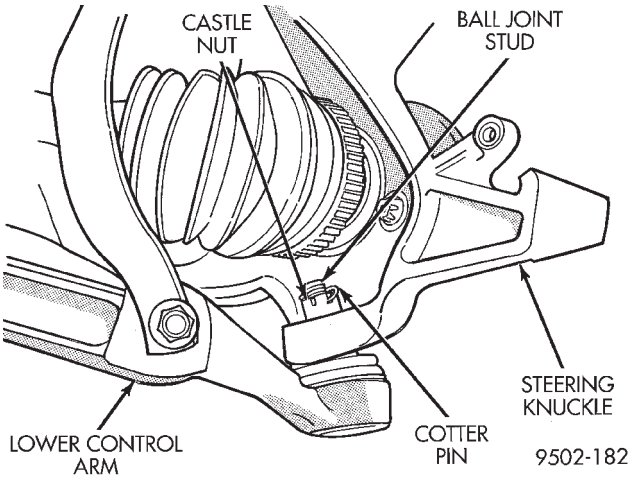

Fig. 10 Lower Ball Joint to Steering Knuckle Attachment

CAUTION: No tool is to be inserted between the steering knuckle and the lower ball joint to separate stud of lower ball joint from the steering knuckle. The steering knuckle is to be separated from the stud of the ball joint only using the procedure as described in Step 13.

(13) Turn steering knuckle so the front of the steering knuckle is facing as far outboard in the wheel well as possible. Using a hammer strike steering knuckle boss until steering knuckle separates from stud of lower ball joint (Fig. 11). **When striking steering knuckle, care MUST be taken not to hit lower control arm or ball joint grease seal.**

NOTE: Care must be taken not to separate the inner C/V joint during this operation. Do not allow driveshaft to hang by inner C/V joint. Driveshaft must be supported.

(14) Pull steering knuckle assembly out and away from outer C/V joint of the driveshaft assembly (Fig. 12).

CAUTION: When inserting pry bar between inner tripod joint and transaxle case, care must be used to ensure no damage occurs to oil seal in transaxle case.

(15) Support the outer end of the driveshaft assembly. Insert a pry bar between inner tripod joint and transaxle case (Fig. 13). Pry against inner tripod joint, until tripod joint retaining snap ring is disengaged from transaxle side gear.

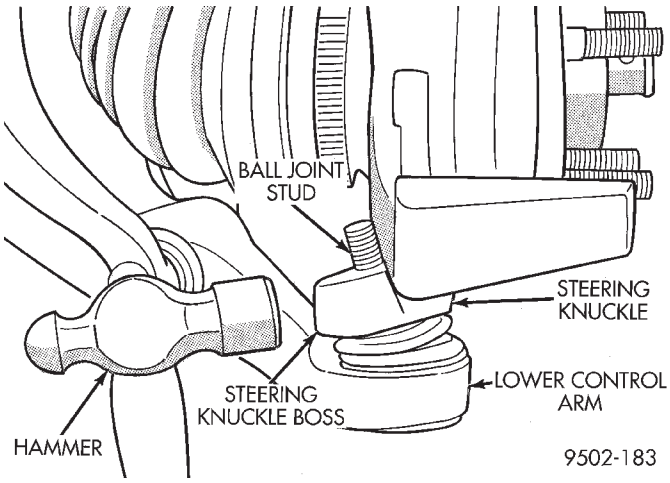

Fig. 11 Separating Ball Joint Stud from Steering Knuckle

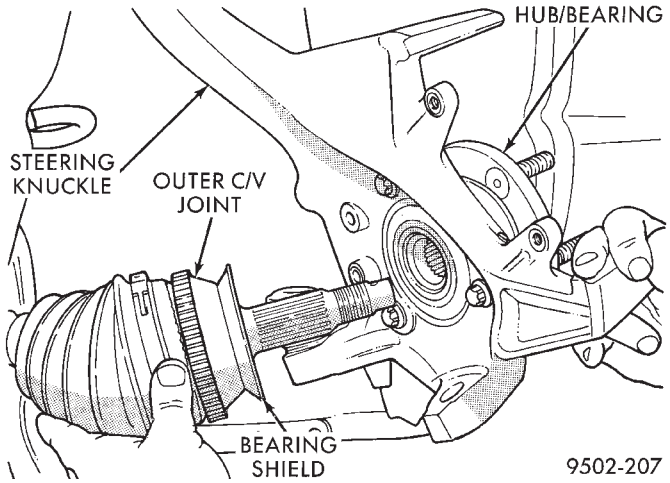

Fig. 12 Separating Steering Knuckle from Outer C/V Joint

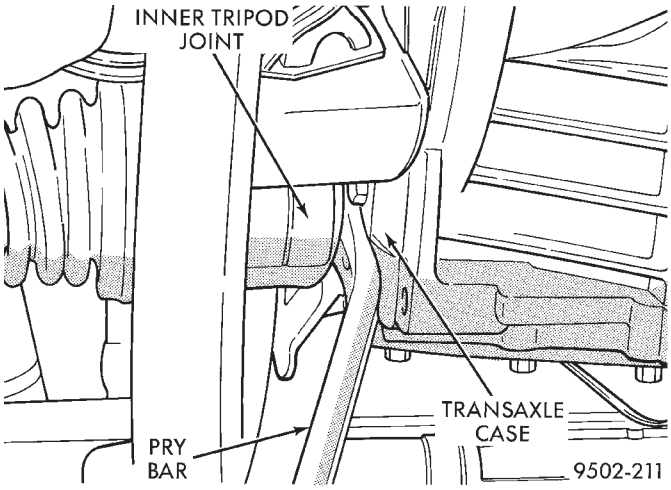

Fig. 13 Disengaging Inner Tripod Joint From Transaxle

REMOVAL AND INSTALLATION (Continued)

(16) Hold inner tripod joint and interconnecting shaft of driveshaft assembly. Remove inner tripod joint from transaxle, by pulling it straight out of transaxle side gear and transaxle oil seal (Fig. 14). **When removing tripod joint, do not let spline or snap ring drag across sealing lip of the transaxle to tripod joint oil seal.**

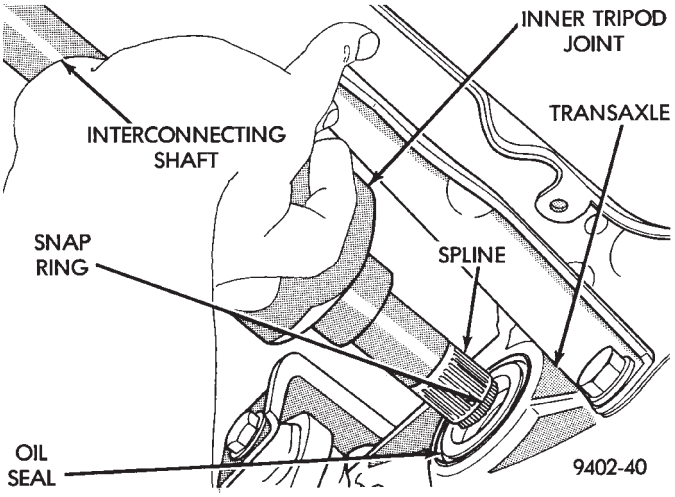

Fig. 14 Tripod Joint Removal from Transaxle

CAUTION: The driveshaft, when installed, acts as a bolt and secures the front hub/bearing assembly. If vehicle is to be supported or moved on its wheels with a driveshaft removed, install a PROPER–SIZED BOLT AND NUT through front hub. Tighten bolt and nut to 183 N·m (135 ft. lbs.). This will ensure that the hub bearing cannot loosen.

INSTALLATION

(1) Thoroughly clean spline and oil seal sealing surface, on tripod joint. Lightly lubricate oil seal sealing surface on tripod joint with fresh clean transmission lubricant.

(2) Holding driveshaft assembly by tripod joint and interconnecting shaft, install tripod joint into transaxle side gear as far as possible by hand (Fig. 14).

(3) Grasp inner tripod joint an interconnecting shaft. Forcefully push the tripod joint into side gear of transaxle, until snap ring is engaged with transaxle side gear. **Test that snap ring is fully engaged with side gear by attempting to remove tripod joint from transaxle by hand. If snap ring is fully engaged with side gear, tripod joint will not be removable by hand.**

(4) Clean all debris and moisture out of steering knuckle, in the area were outer C/V joint will be installed into steering knuckle.

(5) Ensure that front of outer C/V joint which fits against the face of the hub and bearing is free of debris and moisture before installing outer C/V joint into hub and bearing assembly (Fig. 15).

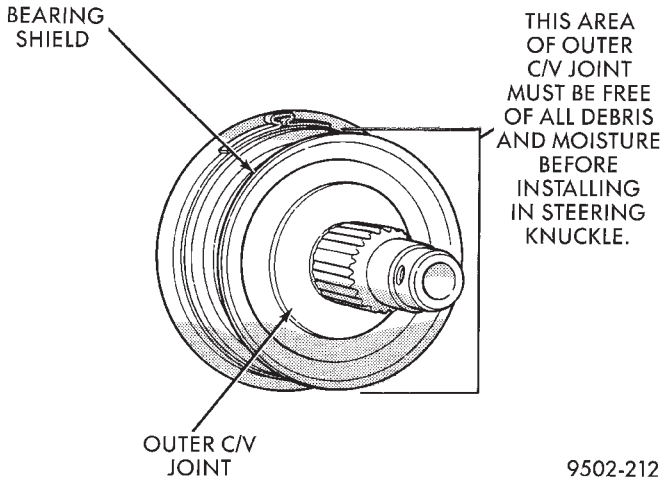

Fig. 15 Outer C/V Joint Inspection

(6) Slide driveshaft back into front hub (Fig. 16). Then install steering knuckle onto the lower control arm ball joint stud.

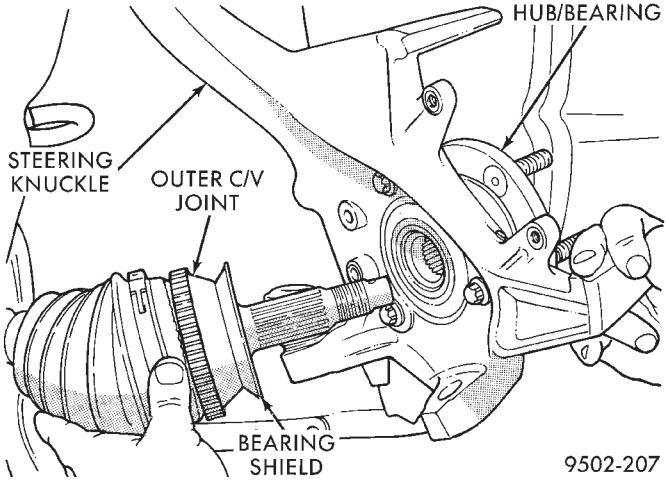

Fig. 16 Steering Knuckle Installation on Outer C/V Joint

(7) Install the steering knuckle to ball joint stud castle nut (Fig. 17). Tighten the castle nut to 95 N·m (70 ft. lbs.).

(8) If equipped with antilock brakes, install the speed sensor cable on the steering knuckle and securely tighten bolt (Fig. 18).

(9) Install tie rod end into the steering knuckle. Start tie rod end to steering knuckle nut onto stud of tie rod end. While holding stud of tie rod end stationary (Fig. 19), tighten tie rod end to steering knuckle nut. Using a crowfoot and 11/32 socket, tighten the nut to 61 N·m (45 ft. lbs.) (Fig. 20).

(10) Install braking disc back on hub and bearing assembly.

(11) Install disc brake caliper assembly on steering knuckle. Caliper is installed by first sliding top of caliper under top abutment on steering knuckle.

REMOVAL AND INSTALLATION (Continued)

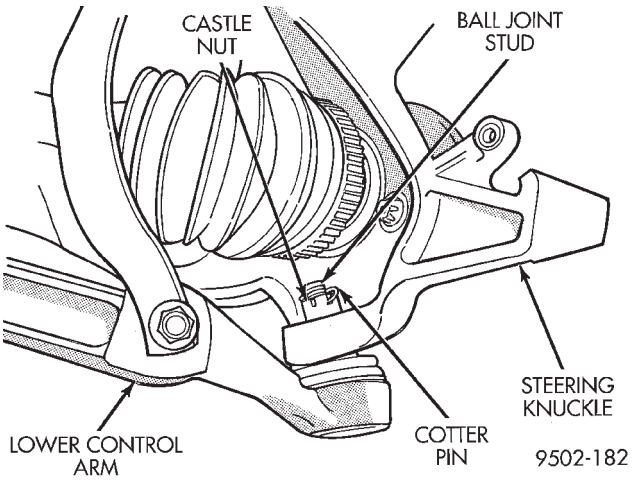

Fig. 17 Lower Ball Joint to Steering Knuckle Attachment

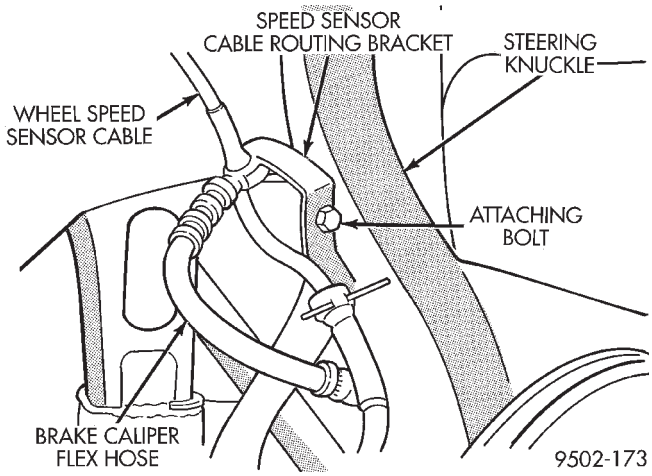

Fig. 18 Wheel Speed Sensor Cable Routing Bracket

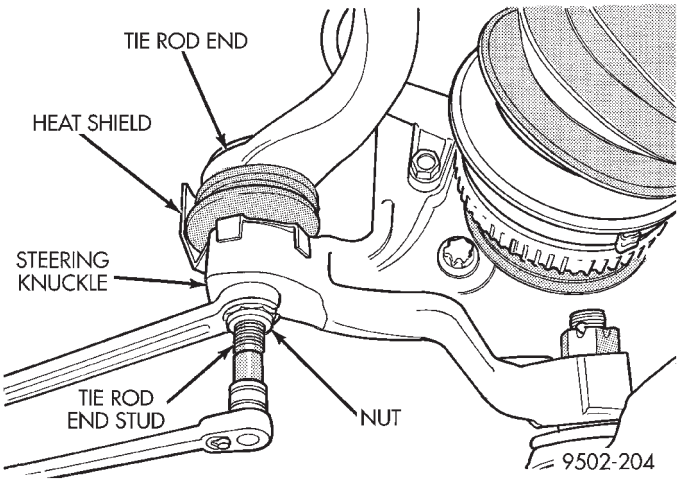

Fig. 19 Installing Tie Rod End Nut

Then installing bottom of caliper against bottom abutment of steering knuckle (Fig. 21).

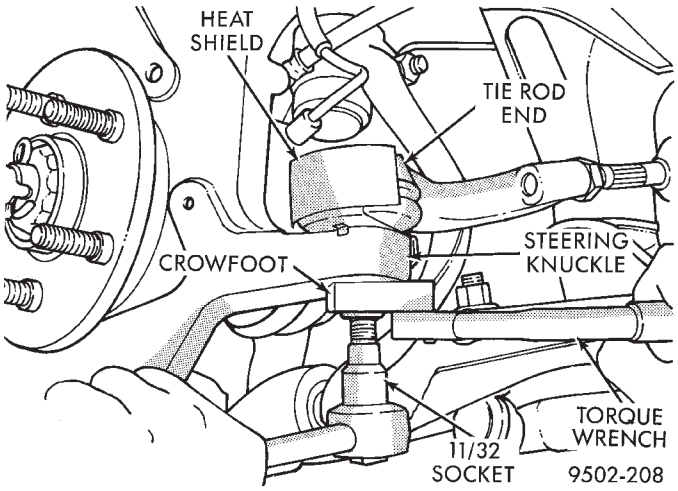

Fig. 20 Torquing Tie Rod End Nut

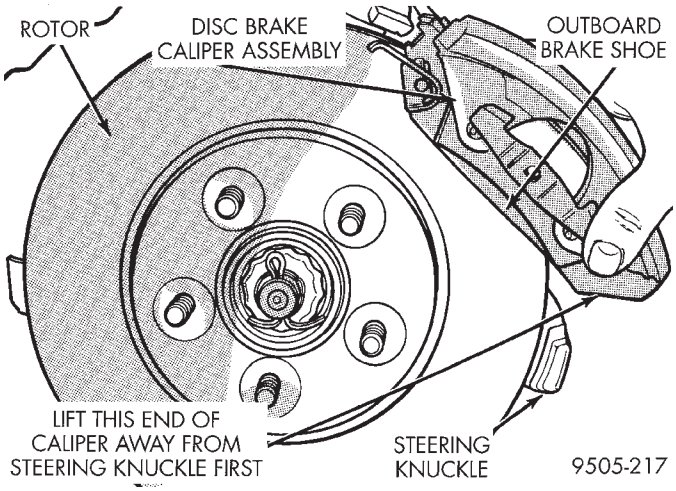

Fig. 21 Disc Brake Caliper Assembly Installation

(12) Install caliper assembly to steering knuckle guide pin bolts (Fig. 22). Tighten caliper assembly bolts to 31 N·m (23 ft. lbs.).

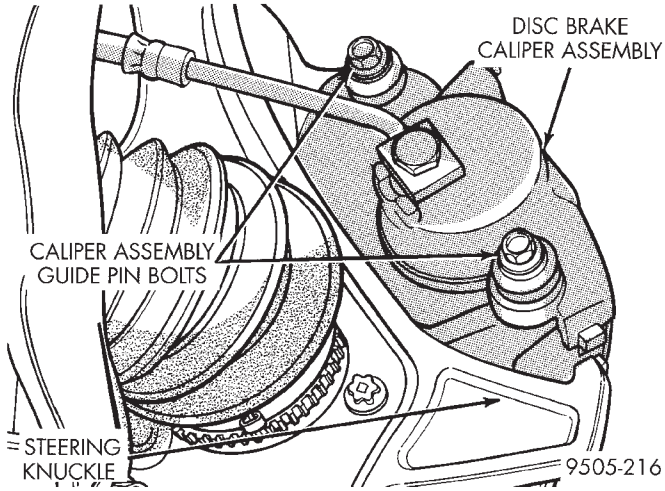

Fig. 22 Disc Brake Caliper Bolts

REMOVAL AND INSTALLATION (Continued)

(13) Clean all foreign matter from the threads of the outer C/V joint stub axle. Install hub nut onto threads of stub axle and tighten nut. (Fig. 23).

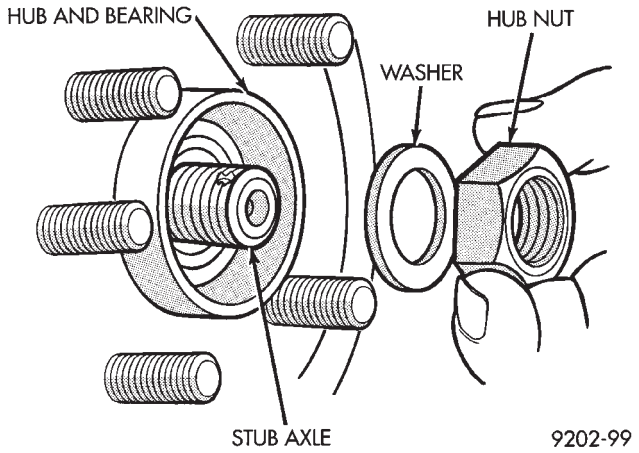

Fig. 23 Install Washer and Hub Nut

(14) With vehicle brakes applied to keep braking disc from turning, tighten hub nut to 244 N·m (180 ft. lbs.) (Fig. 24).

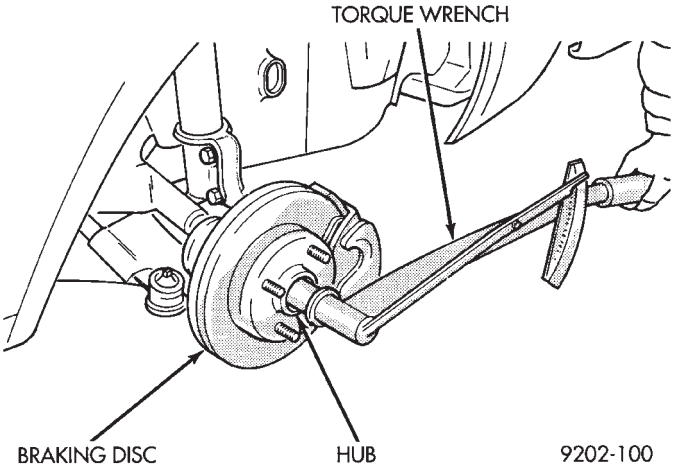

Fig. 24 Torquing Front Hub Nut

(15) Install the spring washer, hub nut lock, and new cotter pin on end of stub axle. Wrap cotter pin prongs tightly around the hub nut lock (Fig. 25).

(16) Install front wheel and tire assembly. Install front wheel lug nuts and tighten in the correct sequence (Fig. 26). Tighten lug nuts to 135 N·m (100 ft. lbs.).

(17) Lower vehicle.

(18) Check for correct fluid level in transaxle assembly. Refer to Group 21, Transaxle for the correct fluid level checking procedure for the type of transaxle being checked.

(19) Set front toe on vehicle to required specification.

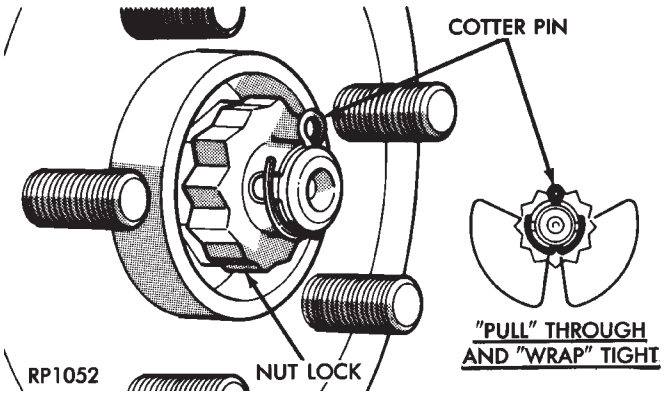

Fig. 25 Spring Washer, Nut Lock and Cotter Pin Installation

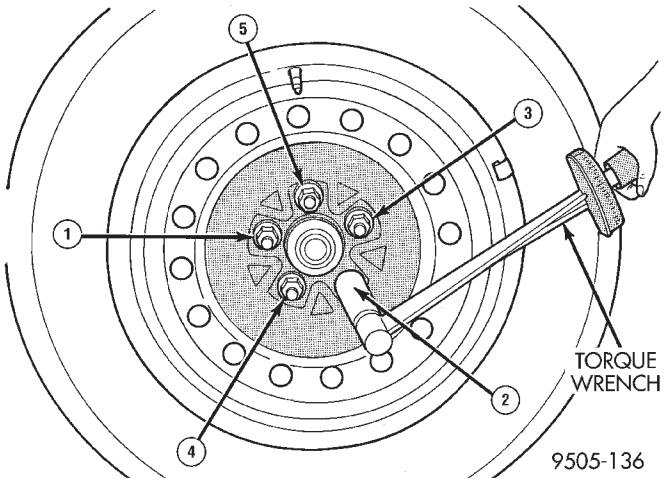

Fig. 26 Wheel Lug Torquing Sequence

DISASSEMBLY AND ASSEMBLY

DRIVESHAFT RECONDITIONING PROCEDURE

CAUTION: The outer C/V joint used on this vehicle uses a new design for retaining the cross to the interconnecting shaft. These driveshafts incorporate a slight twist (helical) in the spline on the interconnecting shaft where the cross is installed. This twist causes a interference fit between the interconnecting shaft and the cross when the outer C/V joint is installed on the interconnecting shaft. This design eliminates the clearance between the cross and the interconnecting shaft resulting in quieter operation of the driveshaft assembly. This design though eliminated the capability of removing the outer C/V joint from the interconnecting shaft. For this reason the driveshafts will be serviced as a quarter shaft (outer C/V joint/sealing boot, interconnecting shaft and vibration damper) in the event of a outer C/V joint boot failure.

DISASSEMBLY AND ASSEMBLY (Continued)

NOTE: The only service which is to be performed on the driveshaft assemblies is the replacement of the driveshaft seal boots on the inner tripod joints.

If any failure of internal driveshaft components is diagnosed during a vehicle road test or disassembly of the driveshaft, the driveshaft will need to be replaced as an assembly.

CAUTION: Lubricant requirements and quantities are different for inner joints than for outer joints. Use only the recommended lubricants in the required quantities when servicing driveshaft assemblies.

INNER TRIPOD JOINT SEAL BOOT

REMOVAL

To remove sealing boots from driveshafts, the driveshaft assemblies must be removed from the vehicle. See Servicing Driveshaft for the required driveshaft removal and replacement procedure.

The inner tripod joints use no internal retention in the tripod housing to keep the spider assembly in the housing. Therefore, do not pull on the interconnecting shaft to disengage tripod housing from transmission stub shaft. Removal in this manner will cause damage to the inboard joint sealing boots.

(1) Remove the driveshaft requiring boot replacement from the vehicle. See Servicing Driveshaft for the required driveshaft removal procedure.

(2) Remove large boot clamp which retains inner tripod joint sealing boot to tripod joint housing and discard. Remove small clamp which retains inner tripod joint sealing boot to interconnecting shaft and discard. Remove the sealing boot from the tripod housing and slide it down the interconnecting shaft.

CAUTION: When removing the tripod joint housing from the spider assembly, hold the bearings in place on the spider trunions to prevent the bearings from falling away.

(3) Slide the tripod joint housing off the spider assembly and the interconnecting shaft (Fig. 27).

(4) Remove snap ring which retains spider assembly to interconnecting shaft (Fig. 28). Remove the spider assembly from interconnecting shaft. If spider assembly will not come off interconnecting shaft by hand, it can be removed by tapping spider assembly with a brass drift (Fig. 29). **Do not hit the outer tripod bearings in an attempt to remove spider assembly from interconnecting shaft.**

(5) Slide sealing boot off interconnecting shaft.

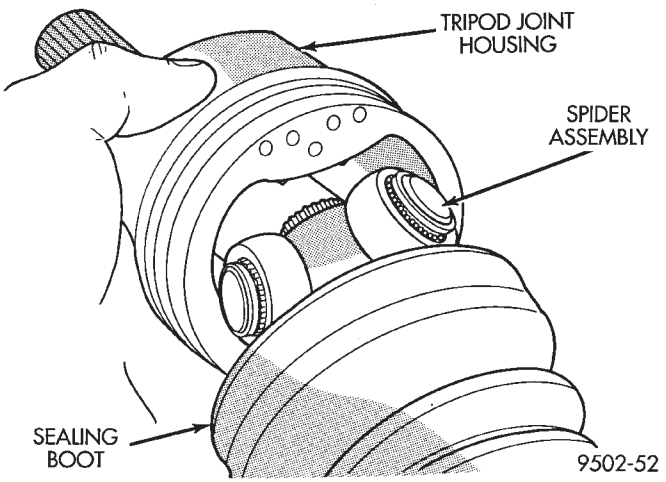

Fig. 27 Spider Assembly Removal from Tripod Joint Housing

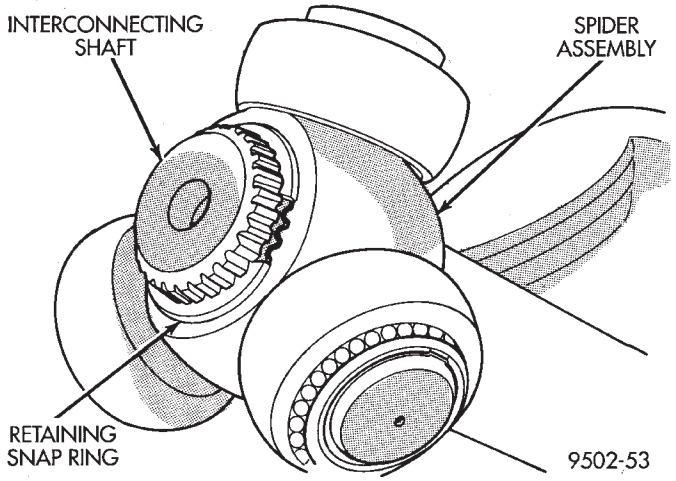

Fig. 28 Spider Assembly Retaining Snap Ring

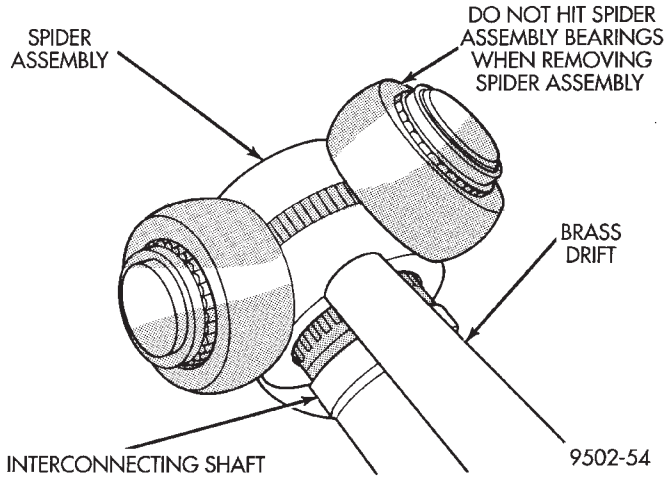

Fig. 29 Spider Assembly Removal from Interconnecting Shaft

DISASSEMBLY AND ASSEMBLY (Continued)

(6) Thoroughly clean and inspect spider assembly, tripod joint housing, and interconnecting shaft for any signs of excessive wear. **If any parts show signs of excessive wear, the driveshaft assembly will require replacement. Component parts of these driveshaft assemblies are not serviceable.**

INSTALLATION

NOTE: The inner tripod joint sealing boots are made from two different types of material. High temperature applications use silicone rubber where as standard temperature applications use hytrel plastic. The silicone sealing boots are soft and pliable. The Hytrel sealing boots are stiff and rigid. The replacement sealing boot MUST BE the same type of material as the sealing boot which was removed.

(1) Slide inner tripod joint seal boot retaining clamp, onto interconnecting shaft. Then, slide the replacement inner tripod joint sealing boot onto the interconnecting shaft. **Inner tripod joint seal boot MUST be positioned on interconnecting shaft, so the raised bead on the inside of the seal boot is in groove on interconnecting shaft (Fig. 30).**

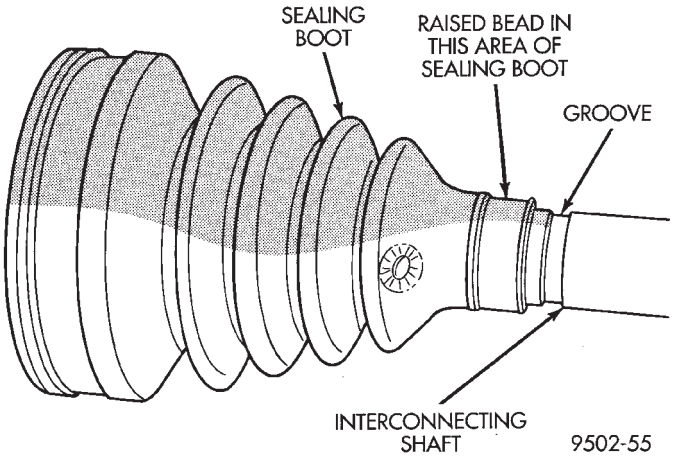

Fig. 30 Sealing Boot Installation on Interconnecting Shaft

(2) Install spider assembly onto interconnecting shaft (Fig. 31). Spider assembly must be installed on interconnecting shaft far enough to fully install spider retaining snap ring. If spider assembly will not fully install on interconnecting shaft by hand, it can be installed by tapping the spider body with a brass drift (Fig. 32). **Do not hit the outer tripod bearings in an attempt to install spider assembly on interconnecting shaft.**

(3) Install the spider assembly to interconnecting shaft retaining snap ring into groove on end of interconnecting shaft (Fig. 33). Be sure the snap ring is fully seated into groove on interconnecting shaft.

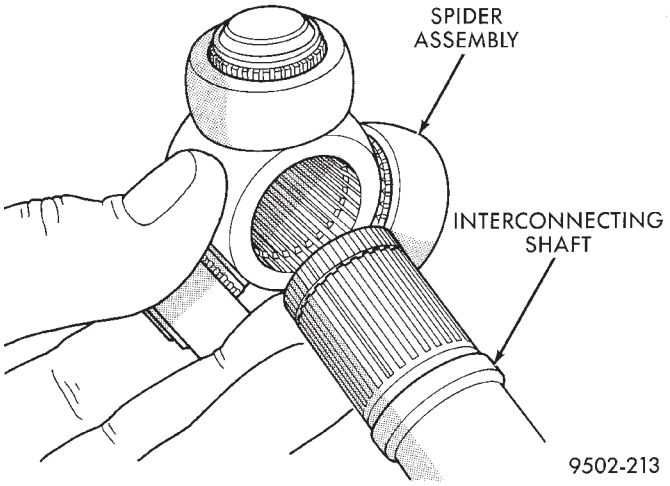

Fig. 31 Spider Assembly Installation on Interconnecting Shaft

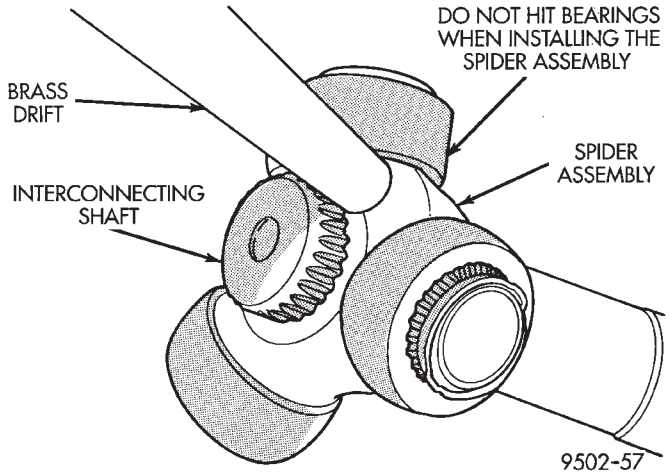

Fig. 32 Installing Spider Assembly on Interconnecting Shaft

(4) Distribute 1/2 the amount of grease provided in the seal boot service package (DO NOT USE ANY OTHER TYPE OF GREASE) into tripod housing. Put the remaining amount into the sealing boot.

(5) Align tripod housing with spider assembly and then slide tripod housing over spider assembly and interconnecting shaft (Fig. 34).

(6) Install inner tripod joint seal boot to interconnecting shaft clamp evenly on sealing boot.

(7) Clamp sealing boot onto interconnecting shaft using crimper, Special Tool C-4975-A and the following procedure. Place crimping tool C- 4975-A over bridge of clamp (Fig. 35). Tighten nut on crimping tool C- 4975-A until jaws on tool are closed completely together, face to face (Fig. 36).

DISASSEMBLY AND ASSEMBLY (Continued)

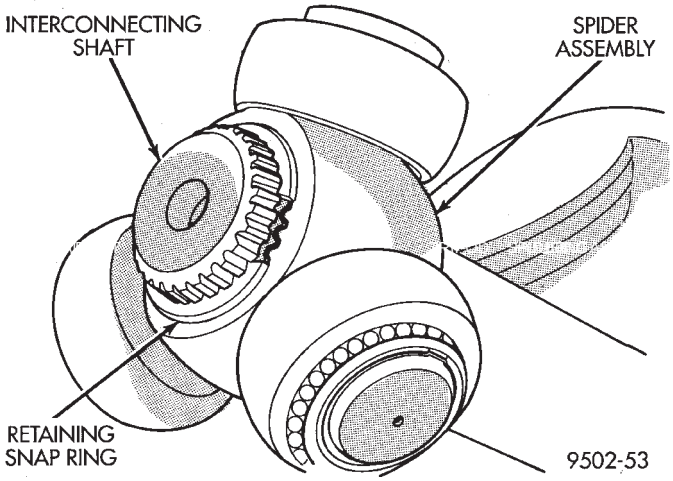

Fig. 33 Spider Assembly Retaining Snap Ring Installed

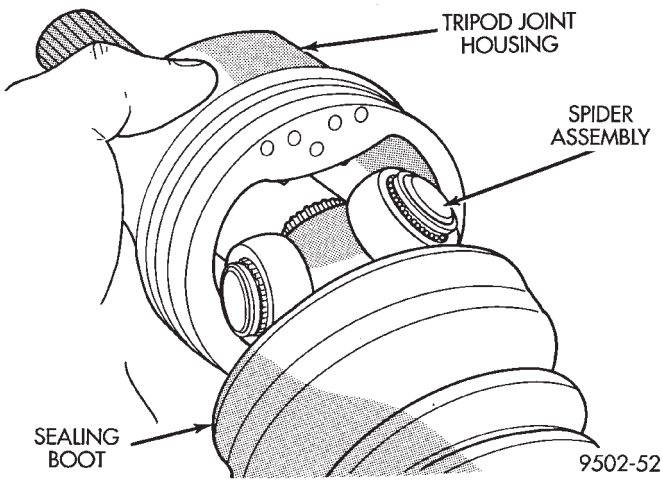

Fig. 34 Installing Tripod Housing on Spider Assembly

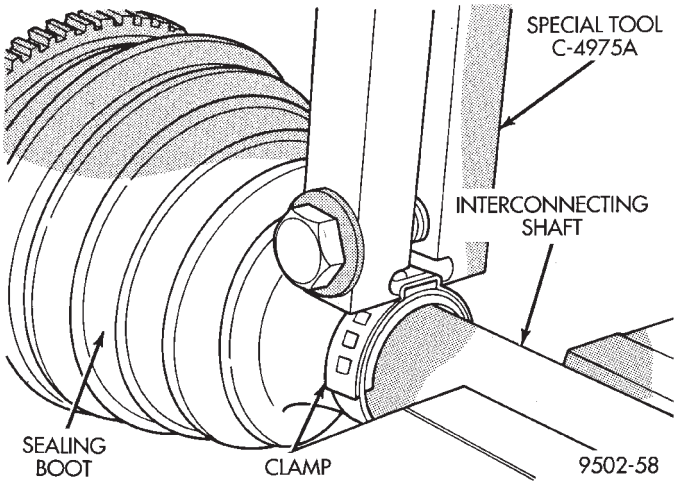

Fig. 35 Crimping Tool Installed on Sealing Boot Clamp

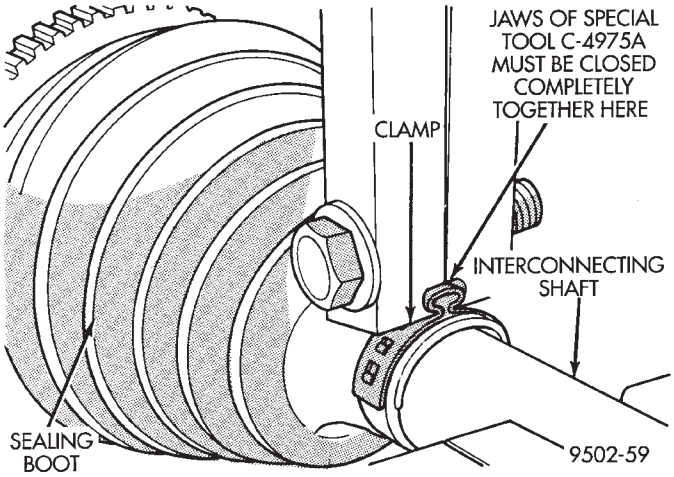

Fig. 36 Sealing Boot Retaining Clamp Installed

CAUTION: Seal must not be dimpled, stretched or out of shape in any way. If seal is NOT shaped correctly, equalize pressure in seal and shape it by hand.

(8) Position sealing boot into the tripod housing retaining groove. Install seal boot retaining clamp evenly on sealing boot.

CAUTION: The following positioning procedure determines the correct air pressure inside the inner tripod joint assembly prior to clamping the sealing boot to inner tripod joint housing. If this procedure is not done prior to clamping sealing boot to tripod joint housing sealing boot durability can be adversely affected.

CAUTION: When venting the inner tripod joint assembly, use care so inner tripod sealing boot does not get punctured, or in any other way damaged. If sealing boot is punctured, or damaged in any way while being vented, the sealing boot can not be used.

(9) Insert a trim stick between the tripod joint and the sealing boot to vent inner tripod joint assembly (Fig. 37). **When inserting trim stick between tripod housing and sealing boot ensure trim stick is held flat and firmly against the tripod housing. If this is not done damage to the sealing boot can occur.** If inner tripod joint has a Hytrel (hard plastic) sealing boot, be sure trim stick is inserted between soft rubber insert and tripod housing not the hard plastic sealing boot and soft rubber insert.

(10) With trim stick inserted between sealing boot and tripod joint housing, position the interconnecting shaft so it is at the center of its travel in the tripod joint housing. Remove the trim stick from between

DISASSEMBLY AND ASSEMBLY (Continued)

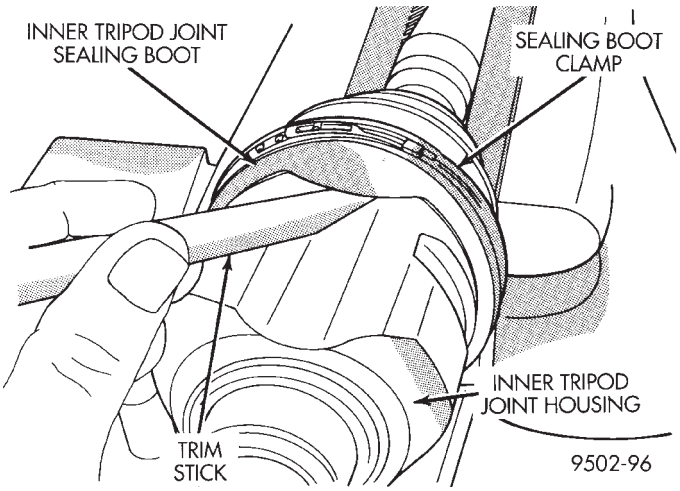

Fig. 37 Trim Stick Inserted for Venting Tripod Joint

the sealing boot and the tripod joint housing. **This procedure will equalize the air pressure in the tripod joint, preventing premature sealing boot failure.**

(11) Position trilobal boot to interface with the tripod housing. The lobes of the boot must be properly aligned with the recess's of the tripod housing.

(12) Clamp tripod joint sealing boot to tripod joint, using required procedure for type of boot clamp application.

CRIMP TYPE BOOT CLAMP

If seal boot uses crimp type boot clamp:

- Clamp sealing boot onto tripod housing using Crimper, Special Tool C-4975-A.
- Place crimping tool C- 4975-A over bridge of clamp (Fig. 38).
- Tighten nut on crimping tool C- 4975-A until jaws on tool are closed completely together, face to face (Fig. 39).

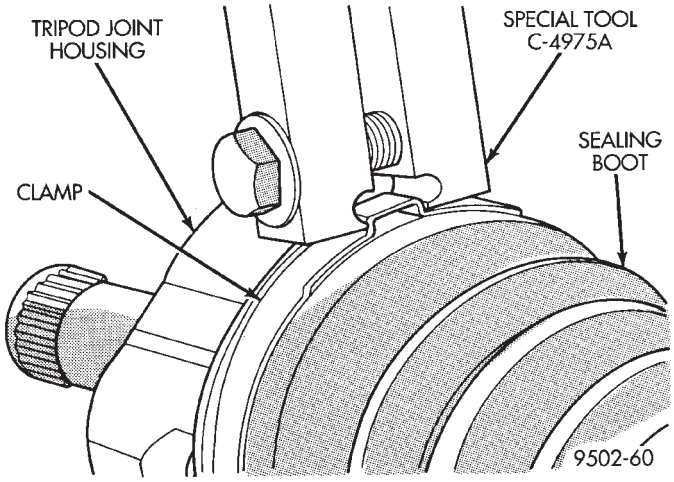

Fig. 38 Crimping Tool Installed on Sealing Boot Clamp

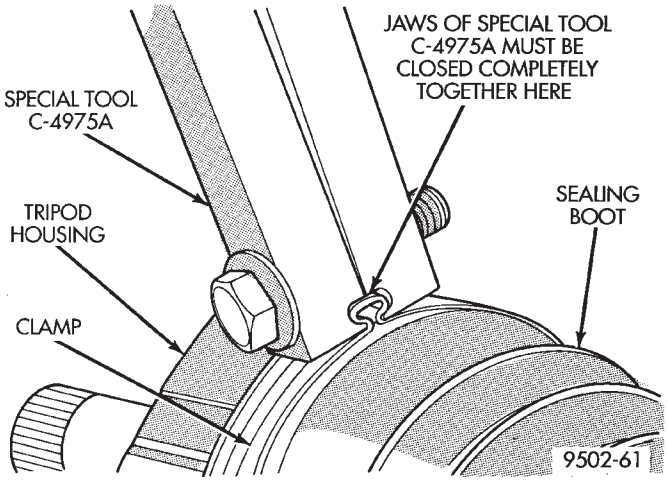

Fig. 39 Sealing Boot Retaining Clamp Installed

LATCHING TYPE BOOT CLAMP

If seal boot uses low profile latching type boot clamp:

- Clamp sealing boot onto tripod housing using clamp locking tool, Snap-On YA3050 or an equivalent.
- Place prongs of clamp locking tool in the holes of the clamp (Fig. 40).
- Squeeze tool together until top band of clamp is latched behind the two tabs on lower band of clamp (Fig. 41).

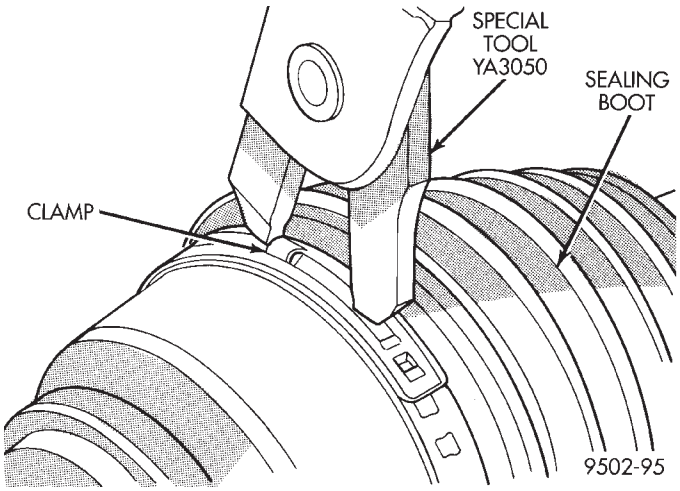

Fig. 40 Clamping Tool Installed on Sealing Boot Clamp

(1) Install the driveshaft back on the vehicle. See Servicing Driveshaft, for the required driveshaft installation procedure.

OUTER C/V JOINT SEALING BOOT SERVICE

CAUTION: The outer C/V joint used on this vehicle is not a serviceable joint.

DISASSEMBLY AND ASSEMBLY (Continued)

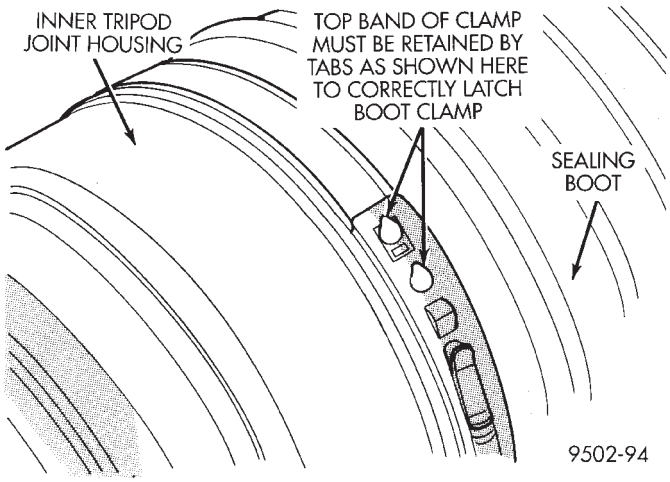

Fig. 41 Sealing Boot Clamp Correctly Installed

CAUTION: The outer C/V joint used on this vehicle uses a new design for retaining the cross to the interconnecting shaft. These driveshafts incorporate a slight twist (helical) in the spline on the interconnecting shaft where the cross is installed. This twist causes a interference fit between the interconnecting shaft and the cross when the outer C/V joint is installed on the interconnecting shaft. This design eliminates the clearance between the cross and the interconnecting shaft resulting in quieter operation of the driveshaft assembly. This design though eliminated the capability of removing the outer C/V joint from the interconnecting shaft. For this reason the driveshafts will be serviced as a quarter shaft (outer C/V joint/sealing boot, interconnecting shaft and vibration damper) in the event of a outer C/V joint boot failure.

OUTER C/V JOINT BEARING SHIELD SERVICE

The front hub/bearing shield on the outer C/V joint is a serviceable component of the outer C/V. If it is damaged in use on a vehicle or during servicing of a driveshaft it can be replaced using the following procedure.

To remove the bearing shield from the outer C/V joint, the driveshaft assemblies must be removed from the vehicle. See Servicing Driveshaft, for the required driveshaft removal and replacement procedure.

BEARING SHIELD REMOVAL FROM OUTER C/V JOINT

(1) Clamp driveshaft in a vise by the interconnecting shaft.

(2) Using a drift (Fig. 42) tap around the entire edge of the bearing shield until it is removed from the outer C/V Joint.

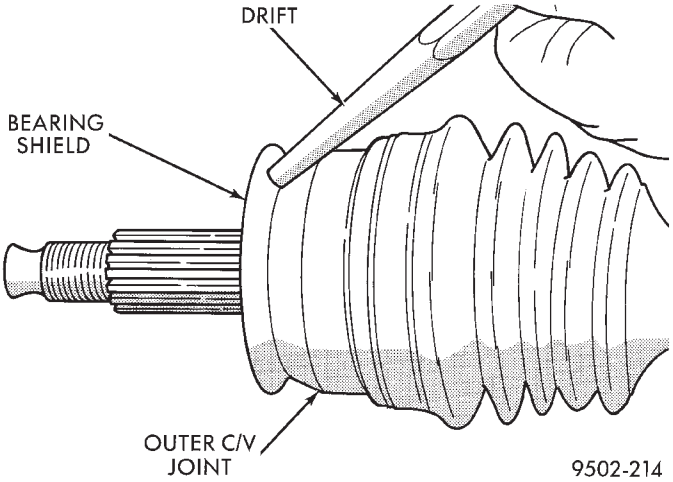

Fig. 42 Removing Bearing Shield from Outer C/V Joint

BEARING SHIELD INSTALLATION ON OUTER C/V JOINT

(1) Install bearing shield by hand on outer C/V Joint so that it is installed squarely on the C/V joint.

(2) Position installer, Special Tool, C-4698-2 and handle, Special Tool, C-4698-1 on face of bearing shield (Fig. 43).

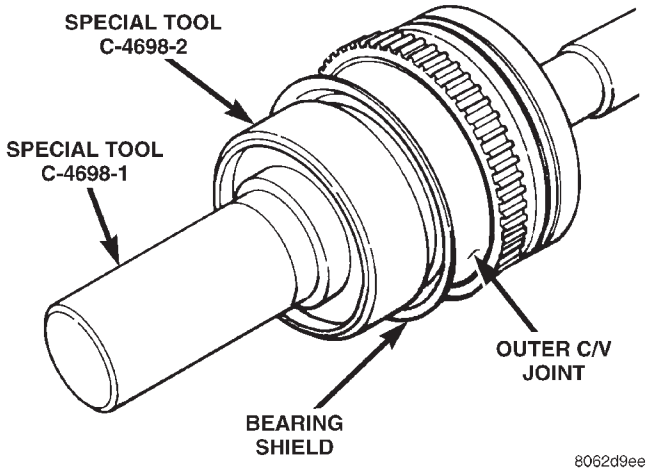

Fig. 43 Special Tools for Installing Bearing Shield

CAUTION: If bearing shield is not installed flush against the face of the outer C/V joint, interference with steering knuckle will occur when driveshaft is installed.

(3) Using a hammer, drive the bearing shield on the outer C/V joint until it is flush against the front of the outer C/V joint (Fig. 44).

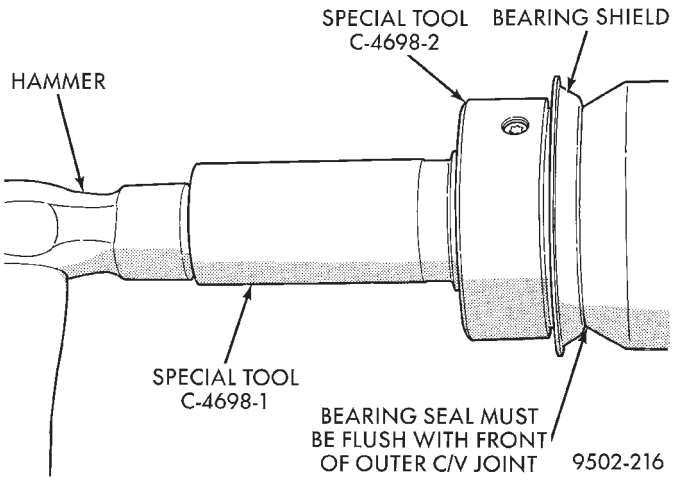

Fig. 44 Correctly Installed Bearing Shield

SPECIFICATIONS

TORQUE SPECIFICATIONS

DESCRIPTION	TORQUE
Caliper To Knuckle Bolts	31 N·m (23 ft. lbs.)
Driveshaft Nut	244 N·m (180 ft. lbs.)
Front Wheel Lug Nuts	135 N·m (100 ft. lbs.)
Knuckle To Ball Stud Nut	95 N·m (70 ft. lbs.)
Tie Rod End To Knuckle	61 N·m (45 ft. lbs.)

SPECIAL TOOLS

DRIVESHAFT–SPECIAL TOOLS

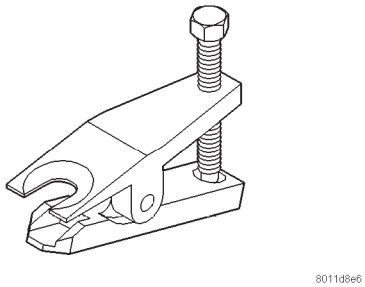

Tie Rod Remover MB-990635

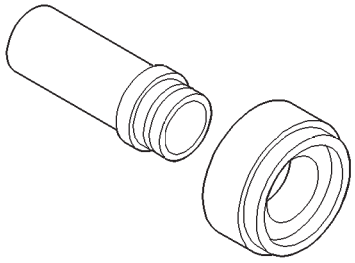

Bearing Shield Installer C-4698

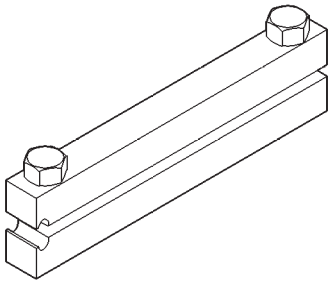

Boot Clamp Installer C-4975A